Round sight glass plates

according and similar to DIN 7080

for round sight glass fittings

INFO DIN 7080

APPLICATION:

MAXOS® safety sight glasses are required wherever visual inspection of processes in vessels under pressure, thermal and chemical stress must be ensured.

The high level of safety is achieved by a special borosilicate glass with good chemical resistance, extraordinary purity and homogeneity. In combination with the low thermal expansion typical for this borosilicate glass, a thermal pre-stress (hardening) leads to a particularly high thermal shock resistance.

OPERATING CONDITIONS:

The characteristic values of the glasses and the narrow dimensional tolerances are guaranteed by production and quality tests during the process. With these outstanding safety properties, MAXOS® safety sight glasses can be used for extreme conditions.

FRACTURE BEHAVIOR:

The adjacent pictures illustrate the fracture behaviour of thermally toughened borosilicate glass. It shatters without leaving sharp-edged fragments. The broken glass resembles a safety front window of a car or a safety glass.

Operating conditions acc. to DIN 7080:	
Temperature:	280 °C - long term use 300 °C - max. 300 hours of operation - or with mica protection
Pressure:	Depending on dimensions and thickness

Technical Information:	
Coefficient of expansion at 20 °C/300 °C	4.1×10^{-6} K^{-1}
Modulus of elasticity	67 x 103 N/mm²
Thermal conductivity at 90 °C	1.2 W/(m·K)
Stress optical coefficient K	3.2×10^{-6} mm²/N
Thermal shock resistance	230 °C

Chemical resistance:	
Water resistance acc. to DIN ISO 719/720	Hydrolysis class 1
Acid resistance acc. to DIN 12116	Acid class 1
Alkali resistance acc. to DIN 52332	Alkali class 2

Round sight glass plates

according and similar to DIN 7080

for round sight glass fittings

INFO DIN 7080

ABRASION RATES:

Ablation of MAXOS sight glass plates according to DIN 7080 in aqueous phase at different temperatures as a function of the pH value.

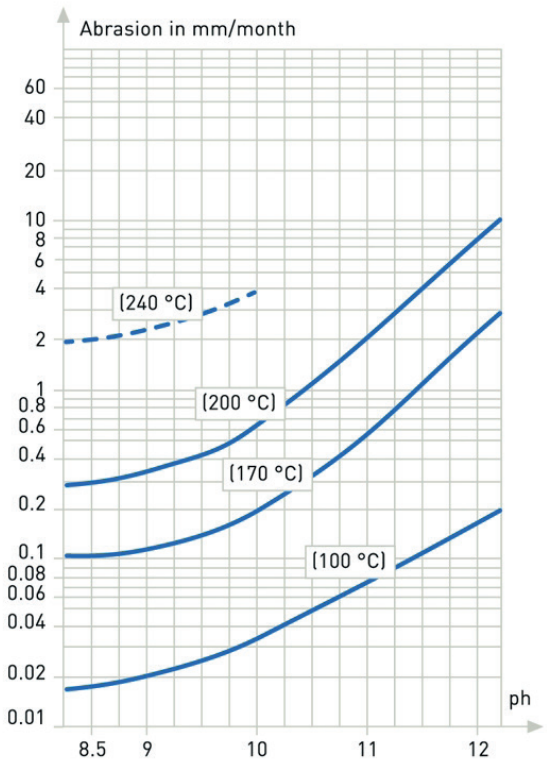

DIMENSIONAL TOLERANCES:

The dimensional tolerances are in accordance with DIN 7080 for sight glass plates made of borosilicate glass. The table on the right shows the expected dimensional tolerances.

Dimensional tolerances according to DIN 7080	
Diameter	tolerance
up to 135 mm	± 0,5 mm
from 150 up to 200 mm	± 0,8 mm
from 200 mm	± 1,0 mm
Thickness	
up to 20 mm	+ 0,50 mm / – 0,25 mm
from 20 mm	+ 0,80 mm / – 0,40 mm

PERMISSIBLE MATERIAL DEFECTS:

Round bubbles enclosed in the glass may have a maximum diameter of 2 mm. Oval bubbles must not exceed the value (length + width)/2 = 2 mm. Tapered bubbles are not permitted.

Permissible bubble frequency	
Bubble diameter d3	bubble frequency
d3 < 0,3	3 per cm² Visible area
0,3 ≤ d3 ≤ 0,5	10 per sight glass plate
0,5 < d3 ≤ 1	4 per sight glass plate
1 < d3 ≤ 2	2 per sight glass plate

Technical changes and errors reserved!

Round sight glass plates

according and similar to DIN 7080

for round sight glass fittings

INFO
DIN 7080

Round sight glass plate according to DIN 7080			
Productcode	Diameter	Thick.	max bar
2071554	45	10	40
2071556	45	12	50
2071558	50	10	25
2071561	50	12	40
2071560	60	10	16
2071562	60	12	25
2071563	60	15	40
2071566	63	10	16
2071567	63	12	25
2071569	63	15	40
2071573	80	12	16
2071575	80	15	25
2071576	80	20	40
2071578	100	15	16
2071579	100	20	25
2071580	100	25	40
2071581	125	15	10
2071582	125	20	16
2071583	125	25	25
2071644	135	25	25
2071586	150	20	10
2071587	150	25	16
2071588	150	30	25
2071589	175	20	10
2071590	175	25	16
2071591	175	30	25
2071592	200	20	8
2071593	200	25	10
2071594	200	30	16
2071595	250	25	8
2071596	250	30	10
2071628	265	30	8

Round sight glass plate similar to DIN 7080			
Productcode	Diameter	Thick.	max bar
2071640	24	10	150
2071553	30	15	200
2071622	30	12	150
2071598	31.6	12.75	150
2071557	33	14	150
2071638	34	17	200
2071552	35	7	25
2071555	40	12	50
2071624	40	10	40
2071564	44	12	50
2071603	44	10	40
2071559	55	10	25
2071626	55	6.5	6
2071604	60	20	95
2071565	63	8	8
2071606	65	15	40
2071629	65	10	12
2071568	70	12	16
2071570	70	15	25
2071607	75	12	16
2071571	80	10	10
2071610	86	12	10
2071572	90	10	8
2071625	92	10	8

Round sight glass plate similar to DIN 7080			
Productcode	Diameter	Thick.	max bar
2071671	94	12	10
2071574	95	15	16
2071649	95	10	6
2071577	100	10	7
2071642	100	12	10
2071662	105	15	16
2071613	110	20	25
2071674	110	12.5	10
2071672	113	15	10
2071612	115	15	10
2071611	120	10	4
2071630	120	15	10
2071663	120	18	16
2071584	125	30	40
2071643	130	15	10
2071615	135	15	8
2071666	140	15	8
2071585	150	15	8
2071664	150	10	2
2071617	160	20	12
2071645	170	15	5
2071670	170	20	10
2071621	210	25	10
2071673	250	20	4

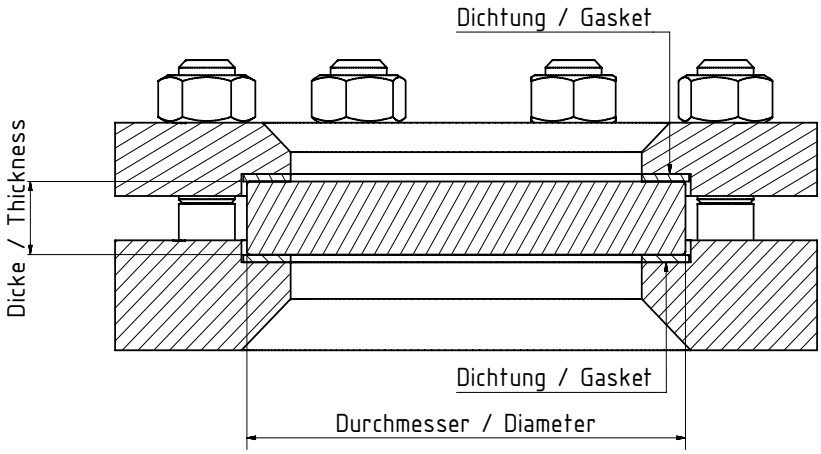

ACI Industriearmaturen GmbH · Königskamp 19 · 52428 Jülich
info@aci24.com
+49 (0) 2461 91634 00
+49 (0) 2461 91634 44
www.aci24.com

20211122
Technical changes and errors reserved!